FLEETWOOD
WINDOWS & DOORS

Series 3900-T

Aluminum Side Hinged Single Door w/ Sidelites & Transom

Outswing

"IMPACT"

L F Schmidt

L. F. SCHMIDT
LICENSE
No. 43409
STATE OF FLORIDA
PROFESSIONAL ENGINEER

Digitally signed by Lyndon F Schmidt
Date: 2026.07.06 07:38:48 -04'00'

This item has been digitally signed and sealed by **L. F. Schmidt, P.E.** on the date adjacent to the seal.

Printed copies of this document are not considered signed and sealed and the signature must be verified on any electronic copies.

THIS PRODUCT APPROVAL IS VALID ONLY FOR THE STATE OF FLORIDA

GENERAL NOTES

1. This product has been evaluated and is in compliance with the 9th Edition (2026) Florida Building Code (FBC) structural requirements including the "High Velocity Hurricane Zone" (HVHZ).
2. Product anchors shall be as listed and spaced as shown on details. Anchor embedment to base material shall be beyond wall dressing or stucco.
3. When used in the "HVHZ" this product complies with Section 1626 of the Florida Building Code and does not require an impact resistant covering.
4. When used in areas outside of the "HVHZ" requiring wind borne debris protection this product complies with FBC Sections 1609.1.2 & R301.2.1.2 and does not require an impact resistant covering. This product meets missile level "D" and includes Wind Zone 4 as defined in ASTM E 1996 and FBC Sections 1609.1.2.2 & R301.2.1.2.1.
5. For 2x stud framing construction, anchoring of these units shall be the same as that shown for 2x buck masonry construction.
6. Site conditions that deviate from the details of this drawing require further engineering analysis by a licensed engineer or registered architect.
7. This product meets water infiltration requirements for "HVHZ".
8. Aluminum components, including fasteners, shall meet the requirements of FBC Section 2003.
9. Gaskets shall comply with FBC Section 2411.3.4.

TABLE OF CONTENTS

SHEET#	DESCRIPTION
1	Typical elevations, design pressures and general notes
2	Door panel details
3	Elevations
4	Horizontal cross sections
5	Horizontal cross sections
6	Vertical cross sections
7	Fin horizontal and vertical cross sections
8	Buck anchoring
9	Frame anchoring
10	Glazing details
11	Components
12	Bill of materials

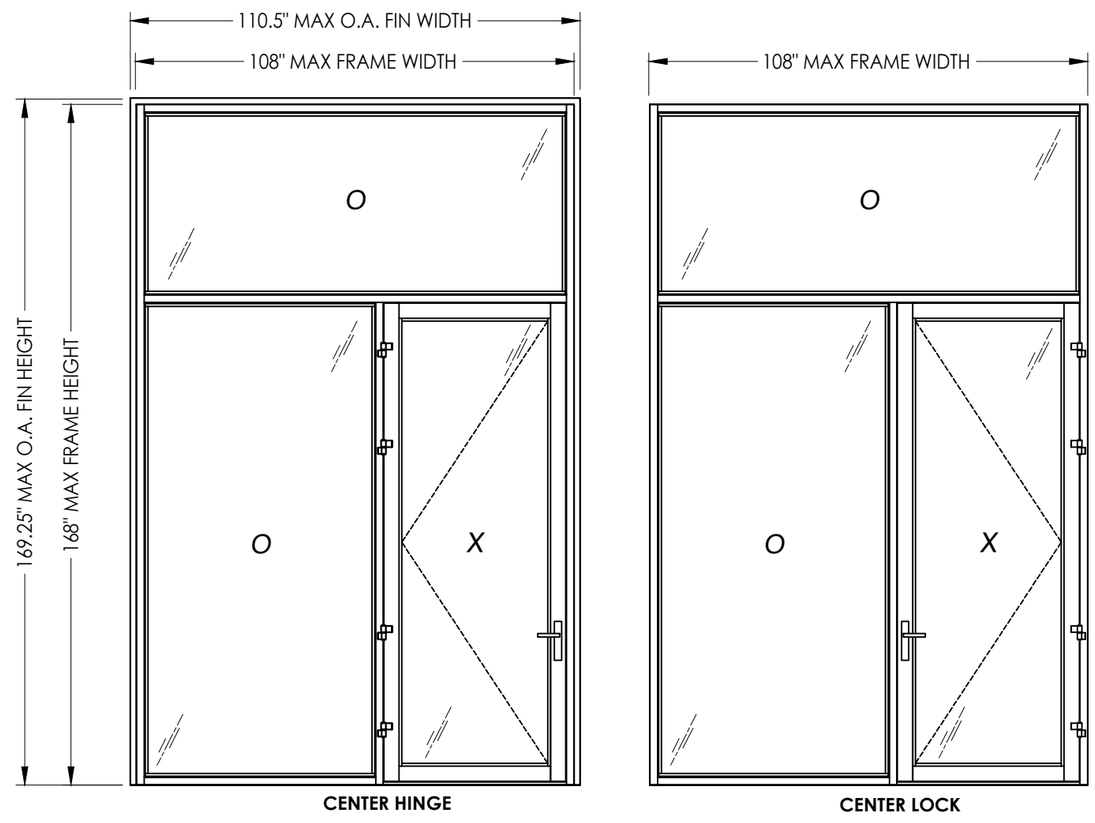

MAX O.A FIN DIMENSION	MAX O.A. FRAME DIMENSION	MAX DOOR D.L.O. DIMENSION	MAX SIDELITE D.L.O. DIMENSION	MAX TRANSOM D.L.O. DIMENSION	GLASS TYPE	DESIGN PRESSURE (PSF)	
						POSITIVE	NEGATIVE
110.5" X 169.25"	108.0" X 168.0"	35.0" X 108.0"	55.25" X 115.25"	102.25" X 43.25"	G1, G2, G3, G4, G5	+50.0	-55.0

NOTE: FRAME ASSEMBLY W/ CENTER LOCK DOOR IS LIMITED TO +/- 50 PSF DESIGN PRESSURE.

Documents Prepared By:
Lyndon F. Schmidt
P.E. No. 43409
R.W. BUILDING CONSULTANTS, INC.
P.O. Box 230, Valrico, FL 33595
Phone No.: 813.659.9197
FBPE Registry No. 9813

PRODUCT: FLEETWOOD WINDOWS AND DOORS

PART OR ASSEMBLY: TYPICAL ELEVATION, DESIGN PRESSURES & GENERAL NOTES

NO.	DATE	REVISIONS	BY
4	7/02/26	UPDATE TO 9TH ED. (2026) FBC	LFS
3	7/11/23	UPDATE TO 8TH ED. (2023) FBC	LFS
2	8/11/20	UPDATE TO 7TH ED. (2020) FBC	DAC
1	08/07/17	UPDATE TO 6TH ED. (2017) FBC	LFS

DATE: 7/29/15
SCALE: N.T.S.
DWG. BY: JK
CHK. BY: LFS
DRAWING NO.: FL-17954.7
SHEET 1 OF 12

© 2015 R.W. BUILDING CONSULTANTS INC.

Z:\2023 FBC Drawings\Fleetwood Windows & Doors\FL-17954 R8 Side Hinged Door\FL-17954.1.3.4.6.7.dwg

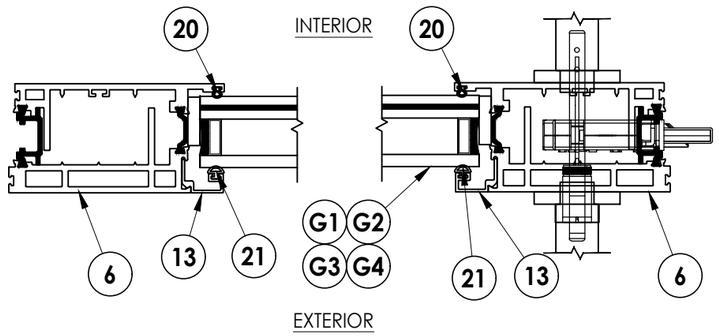

1/2 **HORIZONTAL CROSS SECTION**

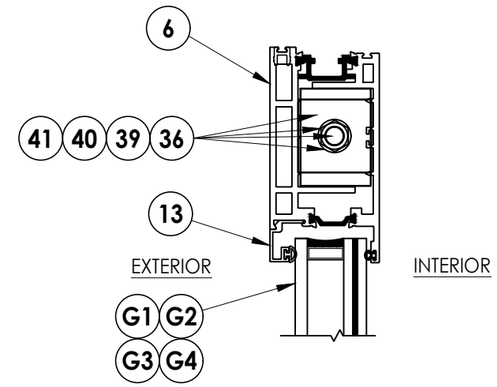

2/2 **VERTICAL CROSS SECTION**

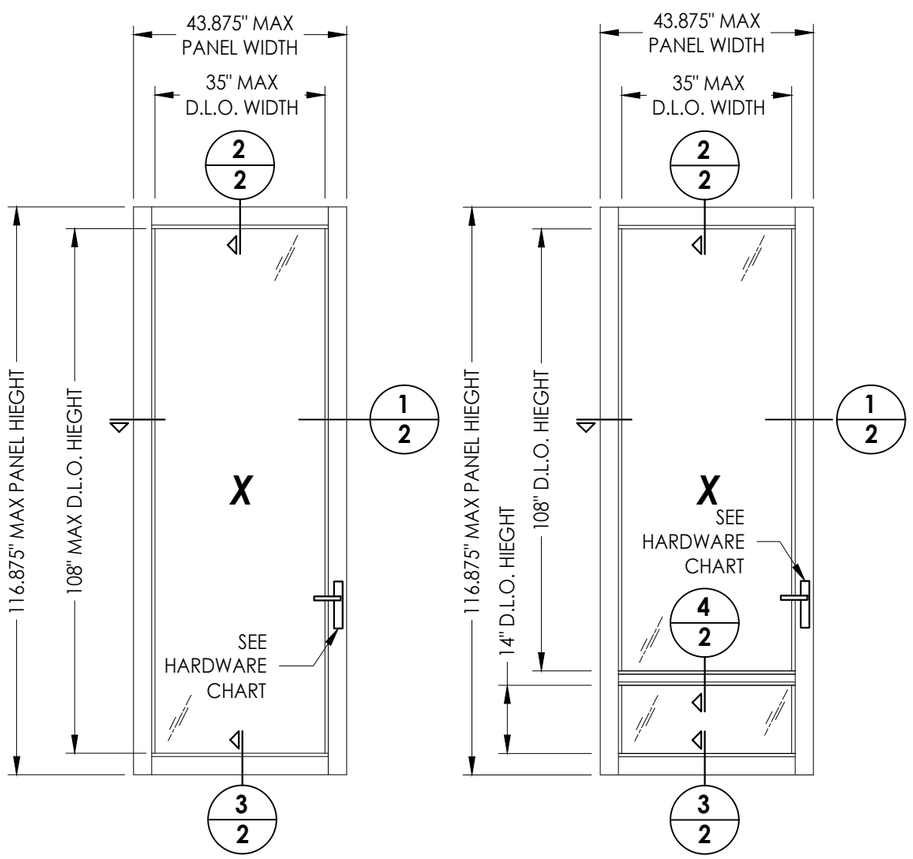

Glazed Door

Glazed Door with TDL Bar

HARDWARE TABLE	
MANUFACTURER	MODEL
TRUTH	MULTI-POINT LOCK: 5 POINT LOCK

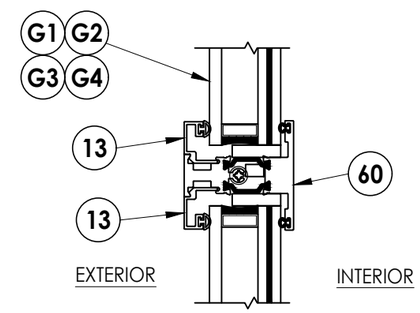

4/2 **VERTICAL CROSS SECTION**

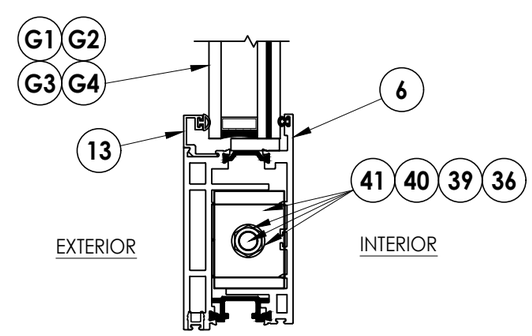

3/2 **VERTICAL CROSS SECTION**

Documents Prepared By:
Lyndon F. Schmidt
P.E. No. 43409

R.W. BUILDING CONSULTANTS, INC.
P.O. Box 230, Valrico, FL 33595
Phone No.: 813.659.9197
FBPE Registry No. 9813

PRODUCT: FLEETWOOD WINDOWS AND DOORS

PART OR ASSEMBLY: DOOR PANEL DETAILS

REVISIONS

NO.	DATE		BY
4	7/02/26	UPDATE TO 9TH ED. (2026) FBC	LFS
3	7/11/23	UPDATE TO 8TH ED. (2023) FBC	LFS
2	8/11/20	UPDATE TO 7th ED. (2020) FBC	DAC
1	08/07/17	UPDATE TO 6TH ED. (2017) FBC	LFS

DATE: 7/29/15

SCALE: N.T.S.

DWG. BY: JK

CHK. BY: LFS

DRAWING NO.: FL-17954.7

SHEET 2 OF 12

© 2015 R.W. BUILDING CONSULTANTS INC.

Z:\2023 FBC Drawings\Fleetwood Windows & Doors\FL-17954 R8 Side Hinged Door\FL-17954.1.3.4.6.7.dwg

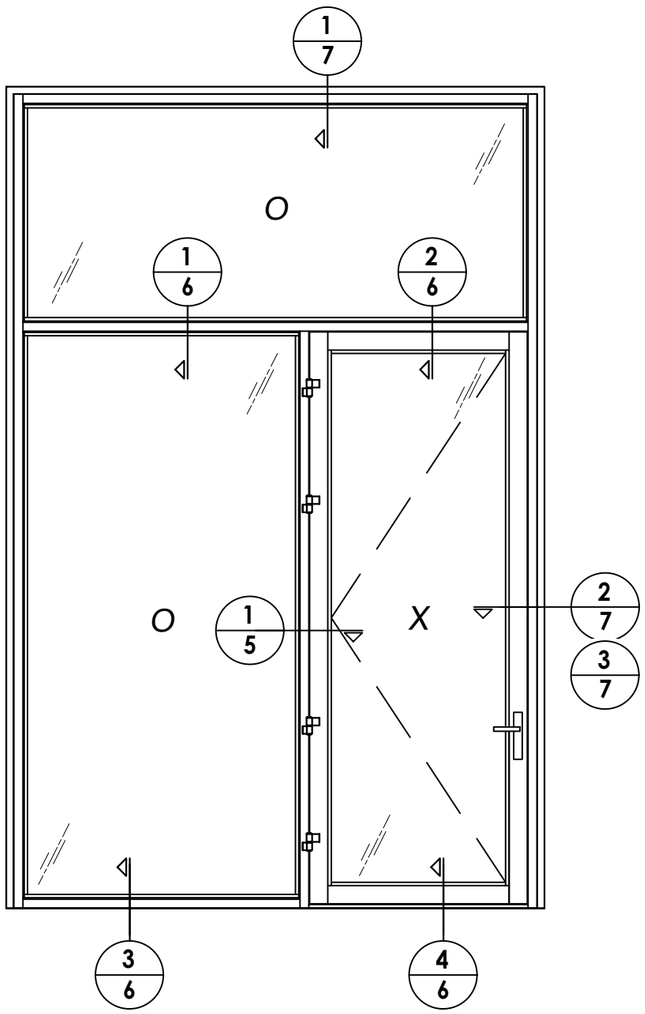

FIN MOUNT

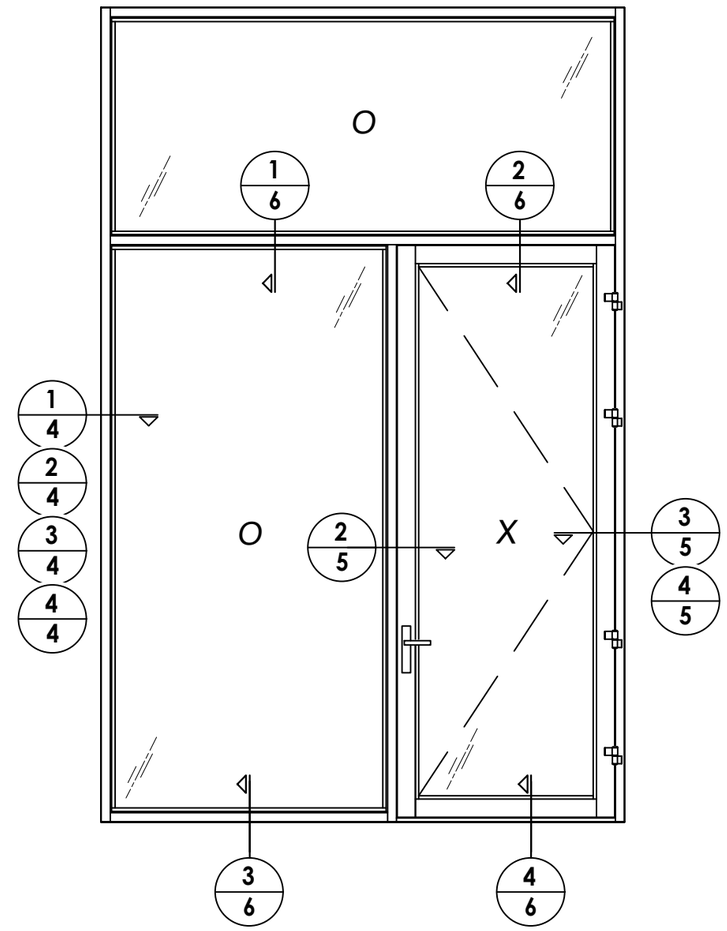

FRAME MOUNT

Documents Prepared By:
Lyndon F. Schmidt
P.E. No. 43409

RW BUILDING CONSULTANTS, INC.
P.O. Box 230, Valrico, FL 33595
Phone No.: 813.659.9197
FBPE Registry No. 9813

PRODUCT:
FLEETWOOD WINDOWS AND DOORS

PART OR ASSEMBLY:
ELEVATIONS

REVISIONS

NO.	DATE		BY
4	7/02/26	UPDATE TO 9TH ED. (2026) FBC	LFS
3	7/11/23	UPDATE TO 8TH ED. (2023) FBC	LFS
2	8/11/20	UPDATE TO 7th ED. (2020) FBC	DAC
1	08/07/17	UPDATE TO 6TH ED. (2017) FBC	LFS

DATE: 7/29/15
SCALE: N.T.S.
DWG. BY: JK
CHK. BY: LFS
DRAWING NO.: FL-17954.7
SHEET 3 OF 12

© 2015 R.W. Building Consultants Inc.

Z:\2023 FBC Drawings\Fleetwood Windows & Doors\FL-17954 R8 Side Hinged Door\FL-17954.1.3.4.6.7.dwg

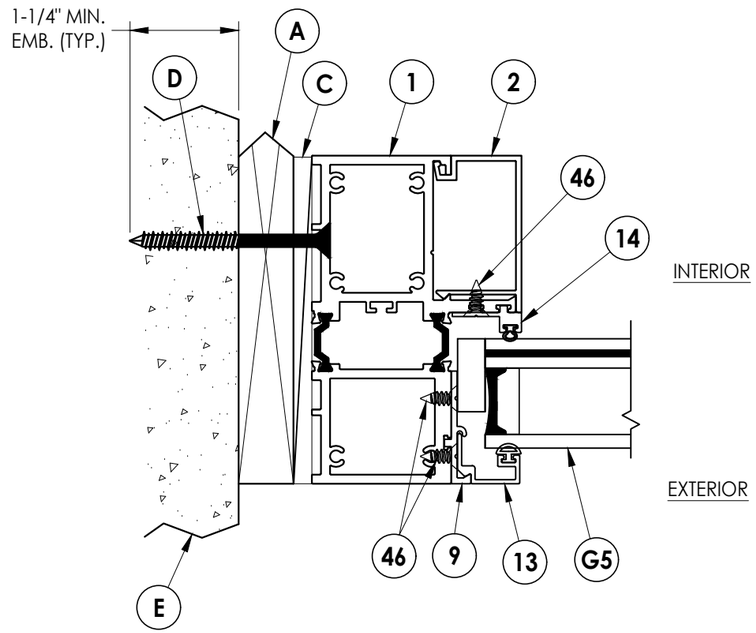

1/4 HORIZONTAL CROSS SECTION
1X Buck Construction

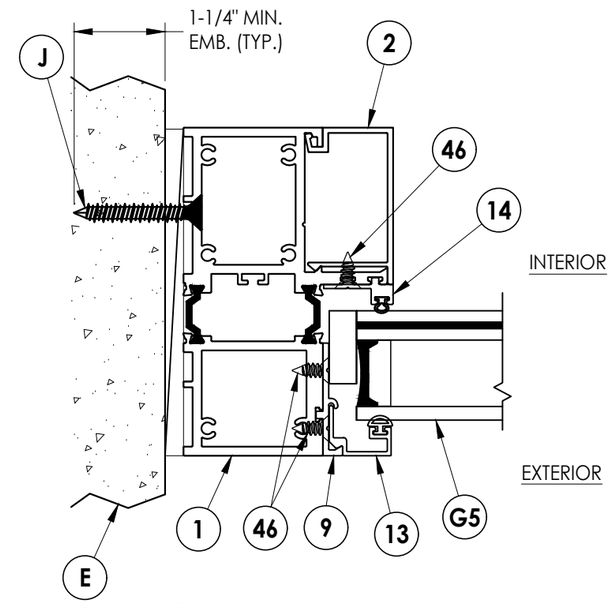

2/4 HORIZONTAL CROSS SECTION
Direct to Masonry

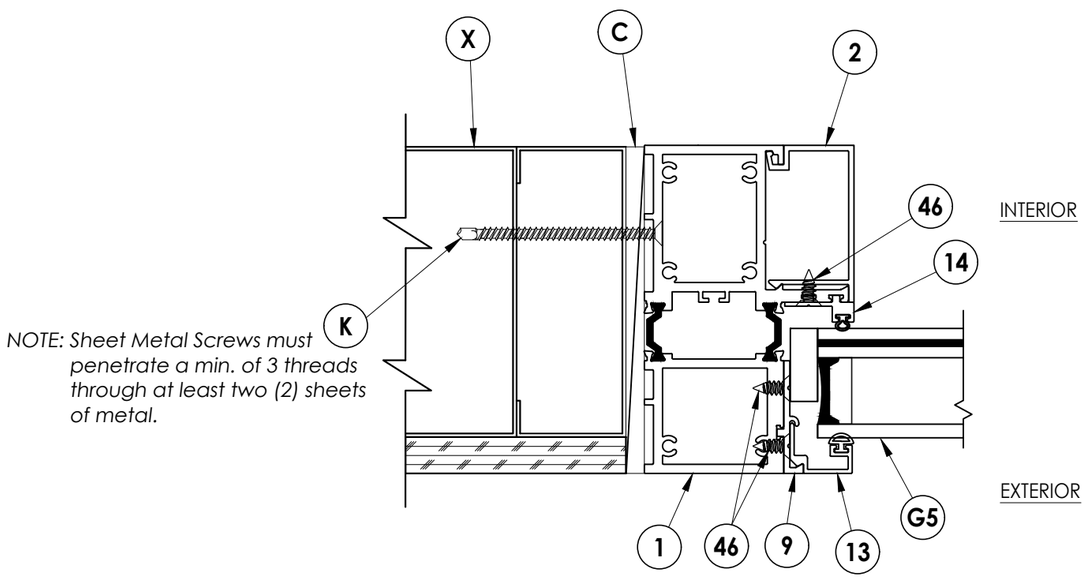

NOTE: Sheet Metal Screws must penetrate a min. of 3 threads through at least two (2) sheets of metal.

3/4 HORIZONTAL CROSS SECTION
Metal Stud Construction

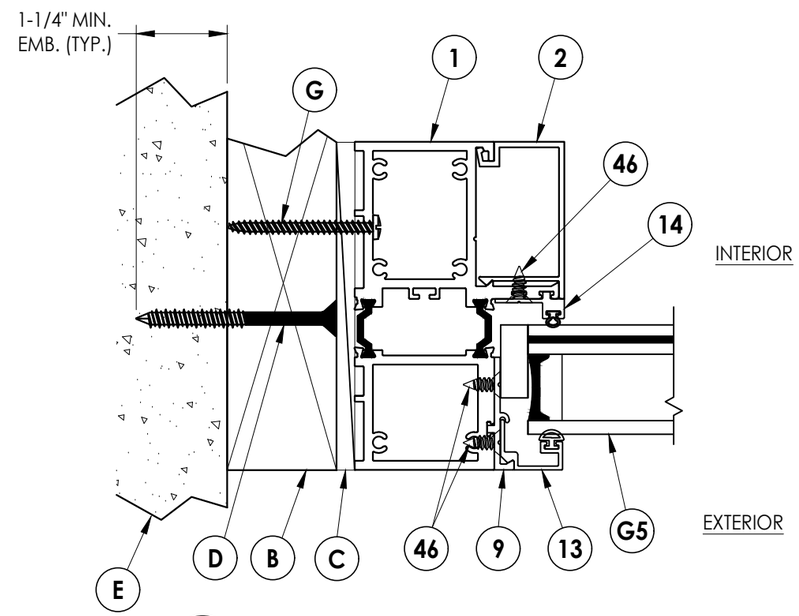

4/4 HORIZONTAL CROSS SECTION
2X Buck Construction

Documents Prepared By:
Lyndon F. Schmidt
P.E. No. 43409

RW BUILDING CONSULTANTS, INC.
P.O. Box 230, Valrico, FL 33595
Phone No.: 813.659.9197
FBPE Registry No. 9813

PRODUCT:
FLEETWOOD WINDOWS AND DOORS

PART OR ASSEMBLY:
HORIZONTAL CROSS SECTIONS

NO.	DATE	REVISIONS	BY
4	7/02/26	UPDATE TO 9TH ED. (2026) FBC	LFS
3	7/11/23	UPDATE TO 8TH ED. (2023) FBC	LFS
2	8/11/20	UPDATE TO 7th ED. (2020) FBC	DAC
1	08/07/17	UPDATE TO 6TH ED. (2017) FBC	LFS

DATE: 7/29/15
SCALE: N.T.S.
DWG. BY: JK
CHK. BY: LFS
DRAWING NO.: FL-17954.7
SHEET 4 OF 12

© 2015 R.W. Building Consultants Inc.

Z:\2023 FBC Drawings\Fleetwood Windows & Doors\FL-17954 R8 Side Hinged Door\FL-17954.1.3.4.6.7.dwg

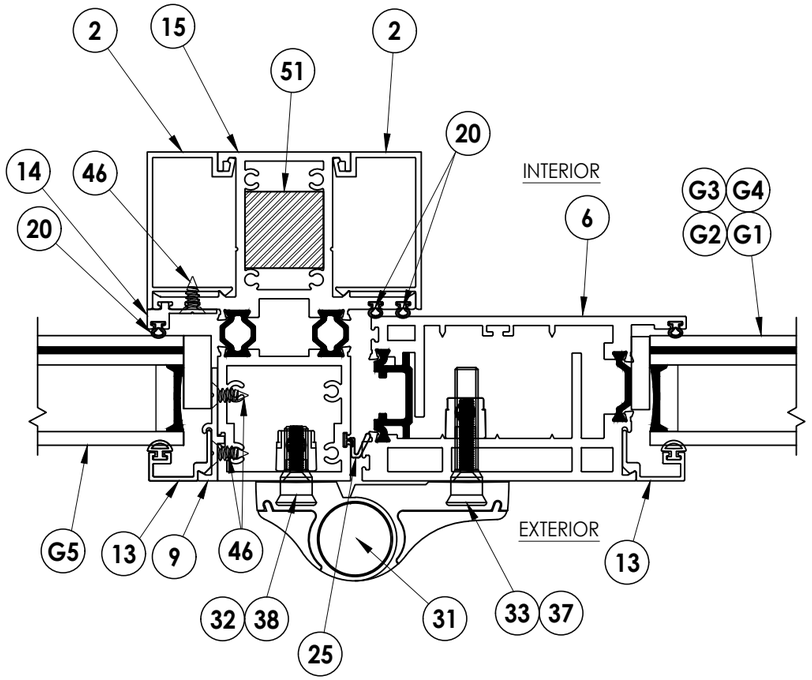

1/5 VERTICAL CROSS SECTION
Outswing shown

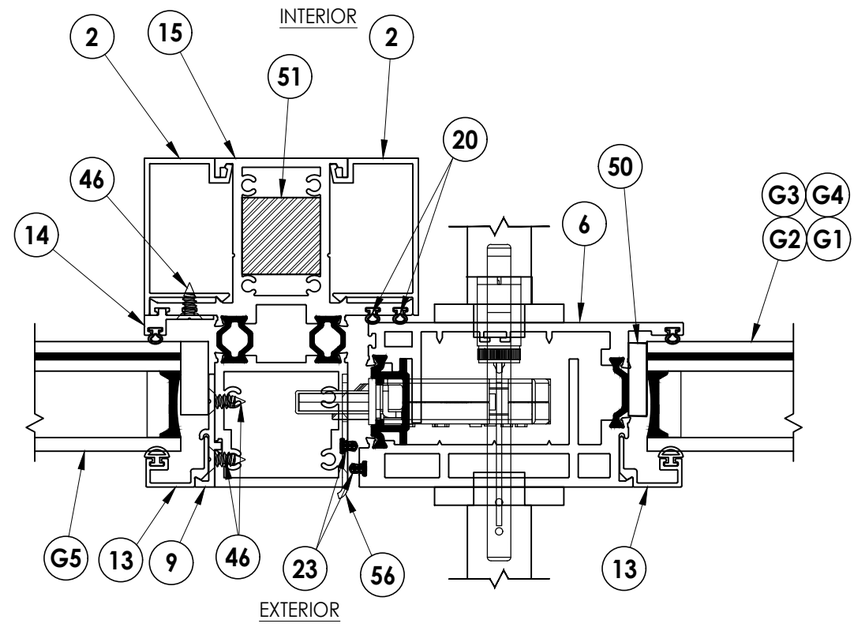

2/5 VERTICAL CROSS SECTION
Outswing shown

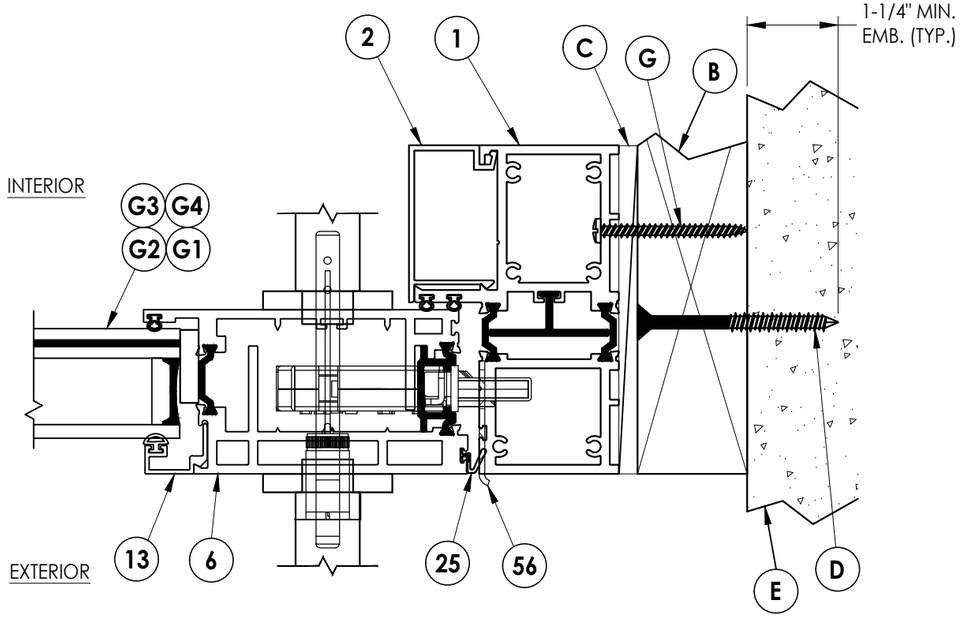

3/5 VERTICAL CROSS SECTION
Outswing shown

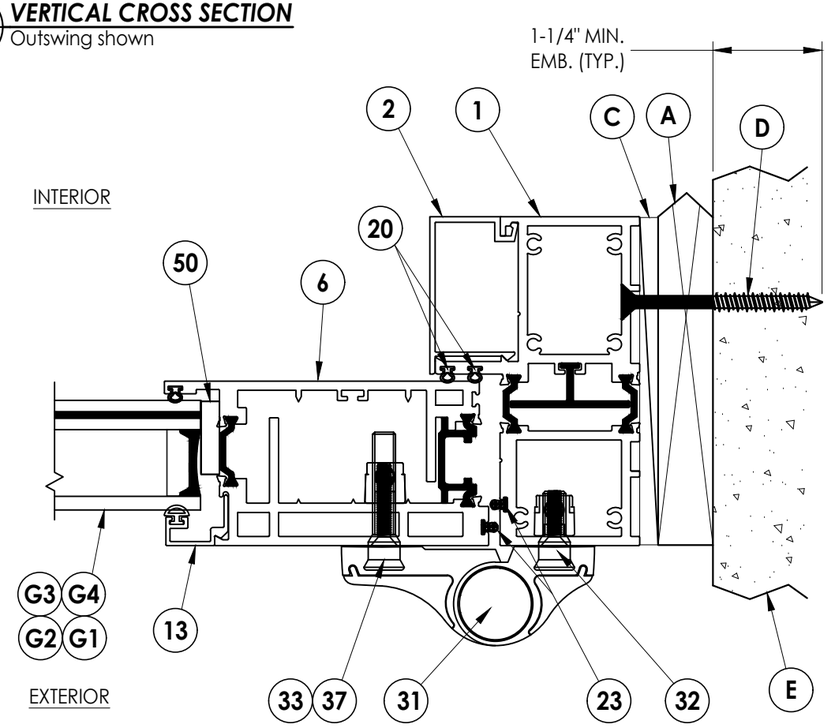

4/5 VERTICAL CROSS SECTION
Outswing shown

Z:\2023 FBC Drawings\Fleetwood Windows & Doors\FL-17954 R8 Side Hinged Door\FL-17954.1.3.4.6.7.dwg

Documents Prepared By:
Lyndon F. Schmidt
P.E. No. 43409

RW BUILDING CONSULTANTS, INC.
P.O. Box 230, Valrico, FL 33595
Phone No.: 813.659.9197
FBPE Registry No. 9813

PRODUCT: FLEETWOOD WINDOWS AND DOORS

PART OR ASSEMBLY: HORIZONTAL CROSS SECTIONS

REVISIONS

NO.	DATE		BY
4	7/02/26	UPDATE TO 9TH ED. (2026) FBC	LFS
3	7/11/23	UPDATE TO 8TH ED. (2023) FBC	LFS
2	8/11/20	UPDATE TO 7th ED. (2020) FBC	DAC
1	08/07/17	UPDATE TO 6TH ED. (2017) FBC	LFS

DATE: 7/29/15
SCALE: N.T.S.
DWG. BY: JK
CHK. BY: LFS
DRAWING NO.: FL-17954.7
SHEET 5 OF 12

© 2015 R.W. Building Consultants Inc.

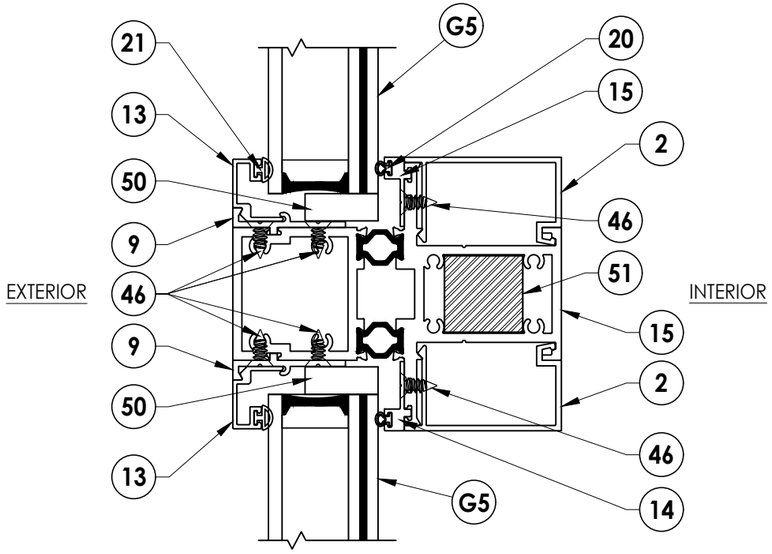

1/6 **VERTICAL CROSS SECTION**
Outswing Shown

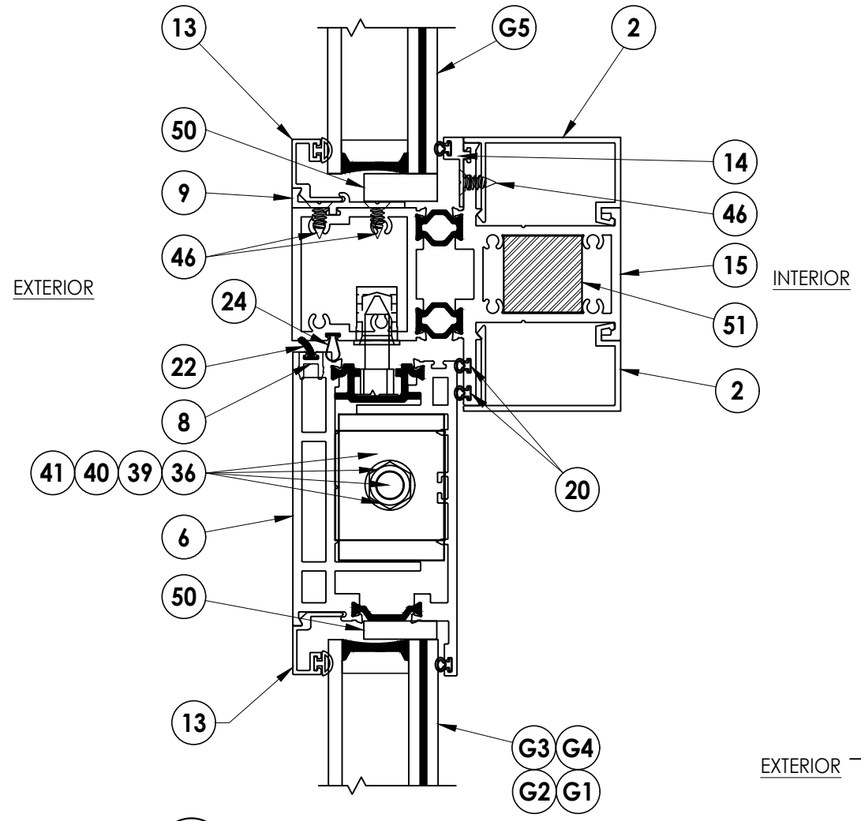

2/6 **VERTICAL CROSS SECTION**
Outswing Shown

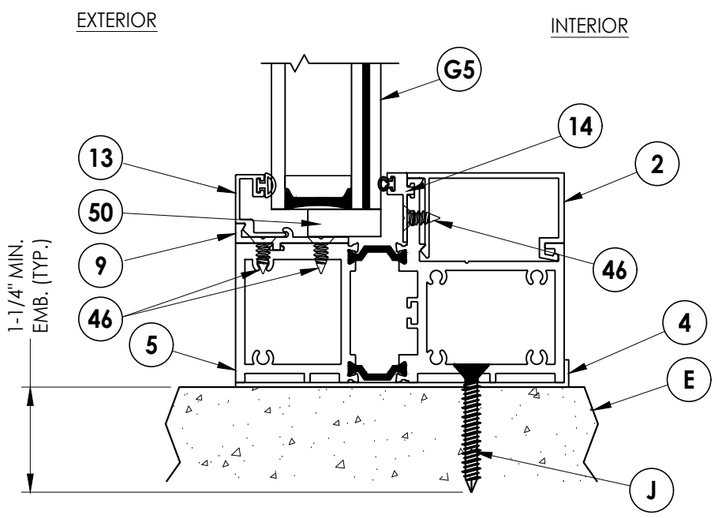

3/6 **VERTICAL CROSS SECTION**
Outswing Shown

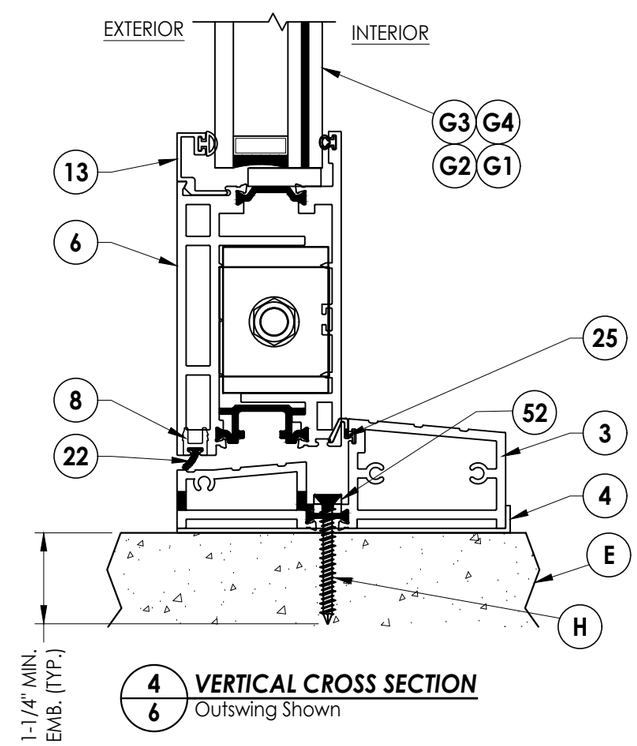

4/6 **VERTICAL CROSS SECTION**
Outswing Shown

Documents Prepared By:
Lyndon F. Schmidt
P.E. No. 43409

RW BUILDING CONSULTANTS, INC.
P.O. Box 230, Valrico, FL 33595
Phone No.: 813.659.9197
FBPE Registry No. 9813

FLEETWOOD WOOD WINDOWS AND DOORS

PART OR ASSEMBLY:
VERTICAL CROSS SECTIONS

REVISIONS

NO.	DATE			
4	7/02/26	UPDATE TO 9TH ED. (2026) FBC	LFS	
3	7/11/23	UPDATE TO 8TH ED. (2023) FBC	LFS	
2	8/11/20	UPDATE TO 7th ED. (2020) FBC	DAC	
1	08/07/17	UPDATE TO 6TH ED. (2017) FBC	LFS	

DATE: 7/29/15
SCALE: N.T.S.
DWG. BY: JK
CHK. BY: LFS
DRAWING NO.: FL-17954.7
SHEET 6 OF 12

© 2015 R.W. BUILDING CONSULTANTS INC.

Z:\2023 FBC Drawings\Fleetwood Windows & Doors\FL-17954 R8 Side Hinged Door\FL-17954.1.3.4.6.7.dwg

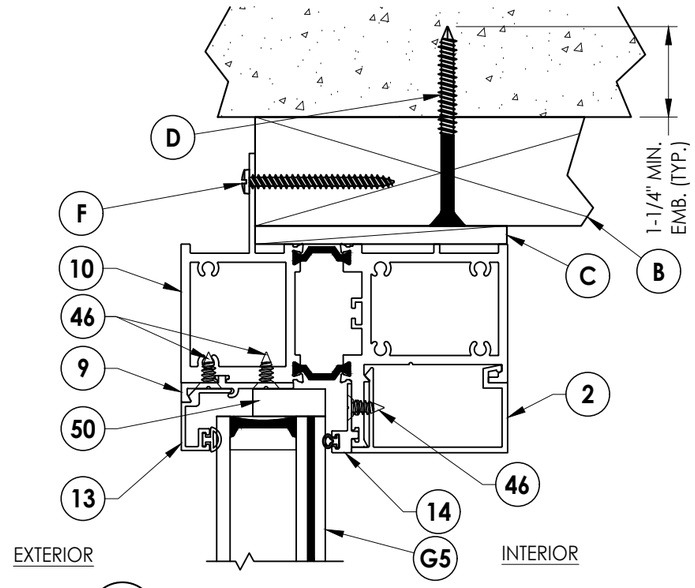

1/7 **VERTICAL CROSS SECTION**
Outswing shown

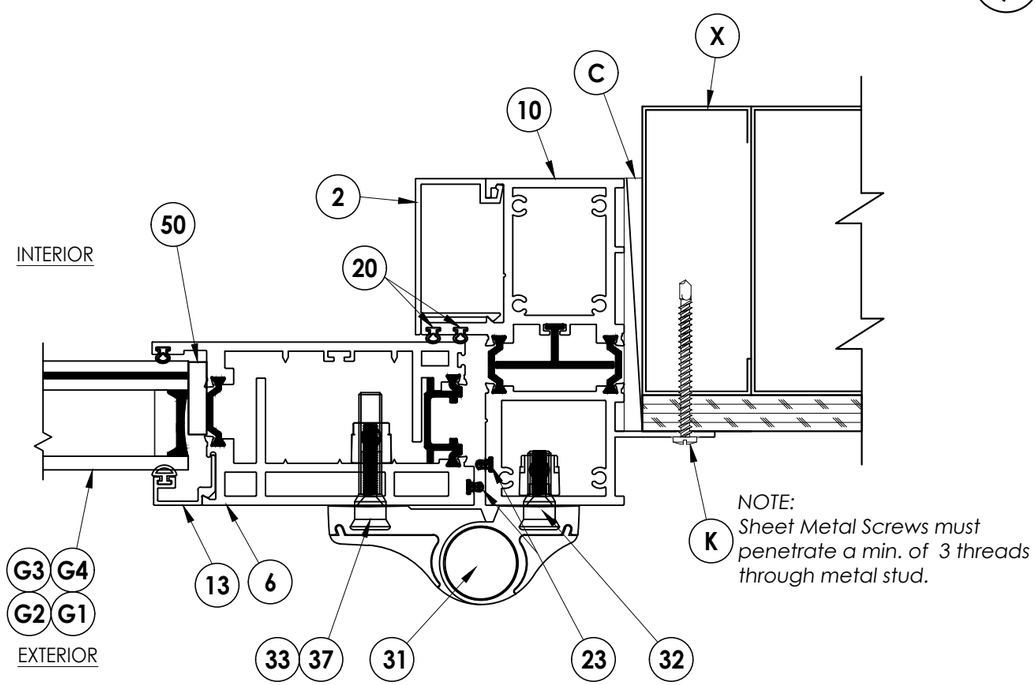

2/7 **HORIZONTAL CROSS SECTION**
Metal Stud Construction
Outswing shown

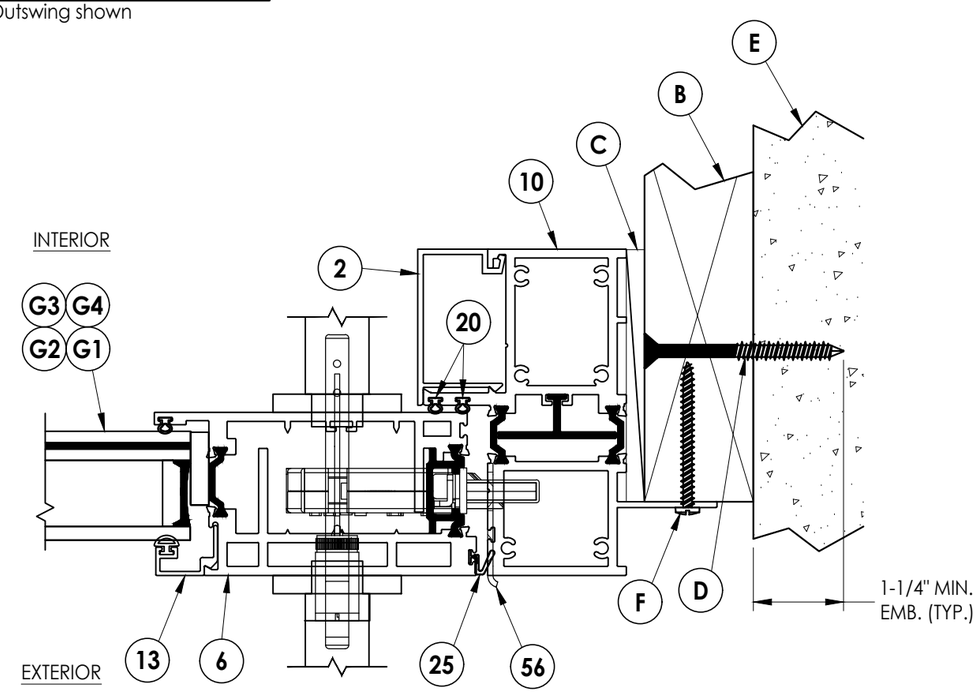

3/7 **HORIZONTAL CROSS SECTION**
2X Buck Construction
Outswing shown

Documents Prepared By:
Lyndon F. Schmidt
P.E. No. 43409

RW BUILDING CONSULTANTS, INC.
P.O. Box 230, Valrico, FL 33595
Phone No.: 813.659.9197
FBPE Registry No. 9813

FLEETWOOD WINDOWS AND DOORS

PART OR ASSEMBLY:
FIN HORIZONTAL AND VERTICAL CROSS SECTIONS

REVISIONS

NO.	DATE			
4	7/02/26	UPDATE TO 9TH ED. (2026) FBC	LFS	
3	7/11/23	UPDATE TO 8TH ED. (2023) FBC	LFS	
2	8/11/20	UPDATE TO 7th ED. (2020) FBC	DAC	
1	08/07/17	UPDATE TO 6TH ED. (2017) FBC	LFS	

DATE: 7/29/15
SCALE: N.T.S.
DWG. BY: JK
CHK. BY: LFS
DRAWING NO.: FL-17954.7
SHEET 7 OF 12

© 2015 R.W. BUILDING CONSULTANTS INC.

Z:\2023 FBC Drawings\Fleetwood Windows & Doors\FL-17954 R8 Side HInged Door\FL-17954.1.3.4.6.7.dwg

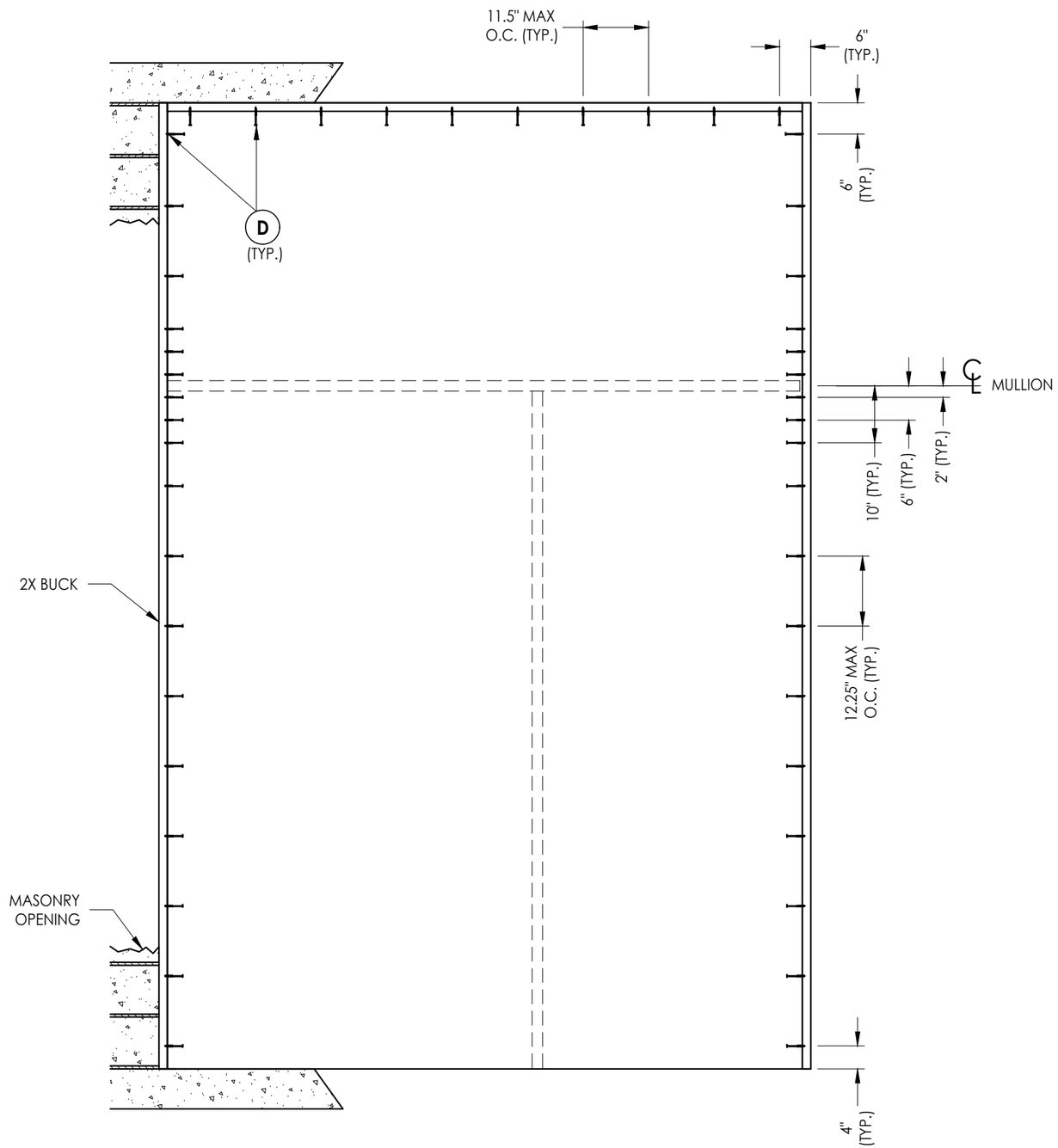

2X BUCK ANCHORING

Documents Prepared By:
Lyndon F. Schmidt
P.E. No. 43409

R.W. BUILDING CONSULTANTS, INC.
P.O. Box 230, Valrico, FL 33595
Phone No.: 813.659.9197
FBPE Registry No. 9813

PRODUCT: *FLEETWOOD WINDOWS AND DOORS*

PART OR ASSEMBLY: *BUCK ANCHORING*

NO.	DATE	REVISIONS	BY
4	7/02/26	UPDATE TO 9TH ED. (2026) FBC	LFS
3	7/11/23	UPDATE TO 8TH ED. (2023) FBC	LFS
2	8/11/20	UPDATE TO 7TH ED. (2020) FBC	DAC
1	08/07/17	UPDATE TO 6TH ED. (2017) FBC	LFS

DATE: 7/29/15
SCALE: N.T.S.
DWG. BY: JK
CHK. BY: LFS
DRAWING NO.: FL-17954.7
SHEET 8 OF 12

© 2014 R.W. Building Consultants Inc.

Z:\2023 FBC Drawings\Fleetwood Windows & Doors\FL-17954 R8 Side Hinged Door\FL-17954.1.3.4.6.7.dwg

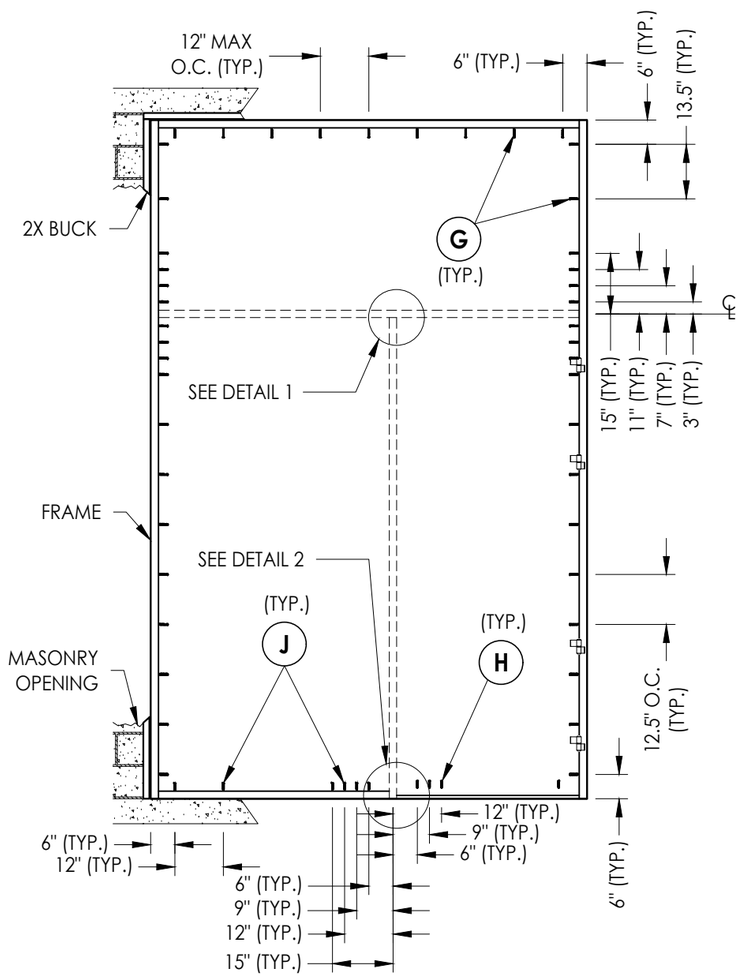

FRAME ANCHORING

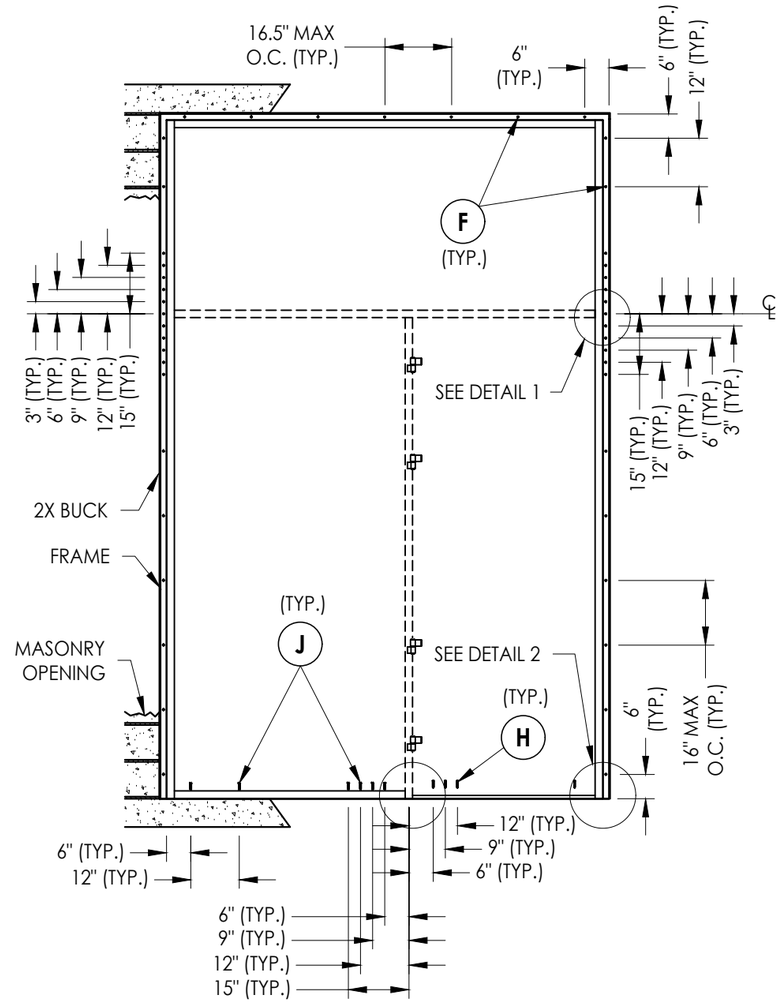

FIN ANCHORING

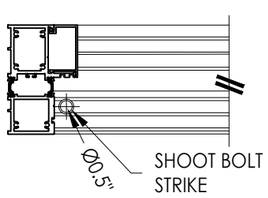

DETAIL 2

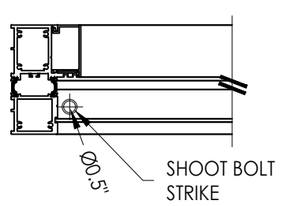

DETAIL 1

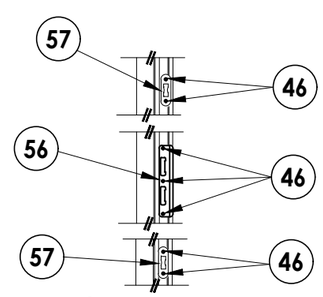

STRIKE DETAIL

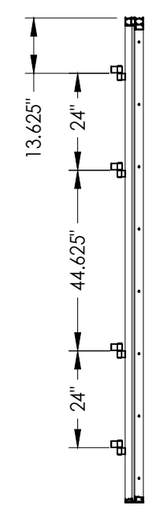

HINGE DETAIL

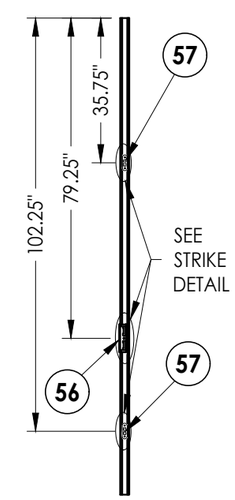

ASTRAGAL DETAIL

Documents Prepared By:
Lyndon F. Schmidt
P.E. No. 43409

R.W. BUILDING CONSULTANTS, INC.
P.O. Box 230, Valrico, FL 33595
Phone No.: 813.659.9197
FBPE Registry No. 9813

PRODUCT: FLEETWOOD WINDOWS AND DOORS

PART OR ASSEMBLY: FRAME ANCHORING

NO.	DATE	REVISIONS	BY
4	7/02/26	UPDATE TO 9TH ED. (2026) FBC	LFS
3	7/11/23	UPDATE TO 8TH ED. (2023) FBC	LFS
2	8/11/20	UPDATE TO 7TH ED. (2020) FBC	DAC
1	08/07/17	UPDATE TO 6TH ED. (2017) FBC	LFS

DATE: 7/29/15
SCALE: N.T.S.
DWG. BY: JK
CHK. BY: LFS
DRAWING NO.: FL-17954.7
SHEET 9 OF 12

© 2015 R.W. BUILDING CONSULTANTS INC.

Z:\2023 FBC Drawings\Fleetwood Windows & Doors\FL-17954 R8 Side Hinged Door\FL-17954.1.3.4.6.7.dwg

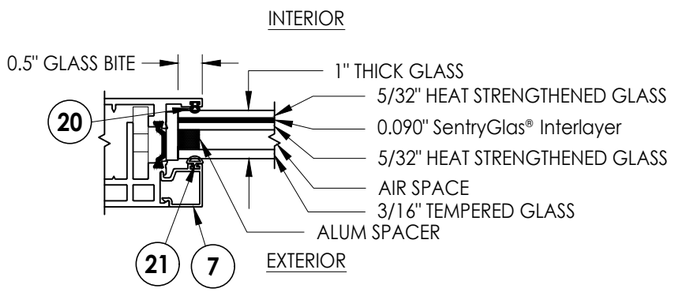

G1 **GLAZING DETAIL**
(Outswing)

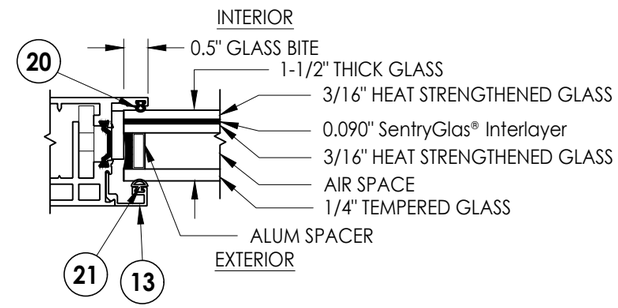

G2 **GLAZING DETAIL**
(Outswing)

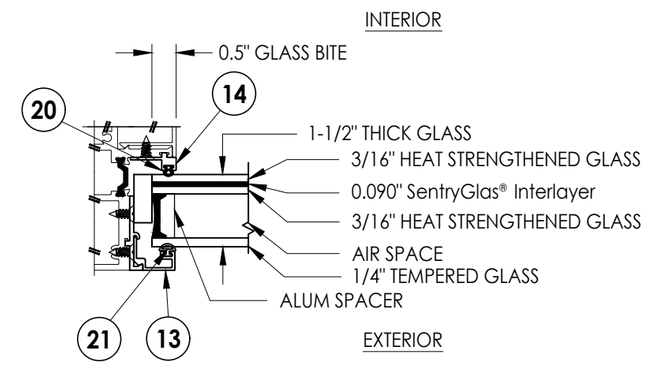

G5 **GLAZING DETAIL**

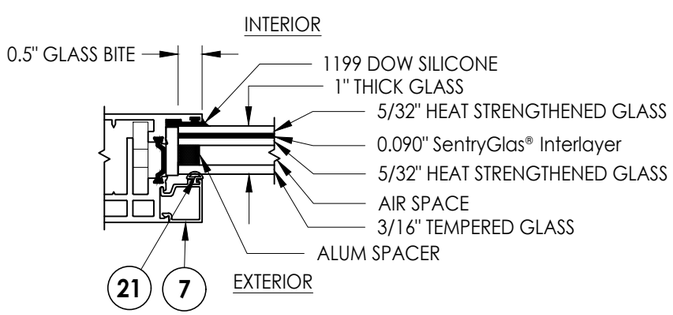

G3 **GLAZING DETAIL**
(Outswing)

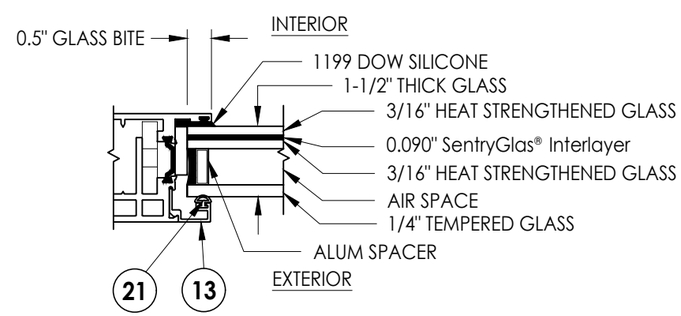

G4 **GLAZING DETAIL**
(Outswing)

NOTE: GLAZING > 36" WIDE REQUIRES AT LEAST TWO (2) SETTING BLOCKS CONFORMING TO FBC SECTION 2411.3.3.1.

Documents Prepared By:
Lyndon F. Schmidt
P.E. No. 43409

RW BUILDING CONSULTANTS, INC.
P.O. Box 230, Valrico, FL 33595
Phone No.: 813.659.9197
FBPE Registry No. 9813

PRODUCT: *FLEETWOOD WINDOWS AND DOORS*

PART OR ASSEMBLY: *GLAZING DETAILS*

REVISIONS

NO.	DATE	BY
4	7/02/26	LFS
3	7/11/23	LFS
2	8/11/20	DAC
1	08/07/17	LFS

UPDATE TO 9TH ED. (2026) FBC
UPDATE TO 8TH ED. (2023) FBC
UPDATE TO 7th ED. (2020) FBC
UPDATE TO 6TH ED. (2017) FBC

DATE: 7/29/15
SCALE: N.T.S.
DWG. BY: JK
CHK. BY: LFS
DRAWING NO.: FL-17954.7
SHEET 10 OF 12

© 2015 R.W. Building Consultants Inc.

Z:\2023 FBC Drawings\Fleetwood Windows & Doors\FL-17954 R8 Side Hinged Door\FL-17954.1.3.4.6.7.dwg

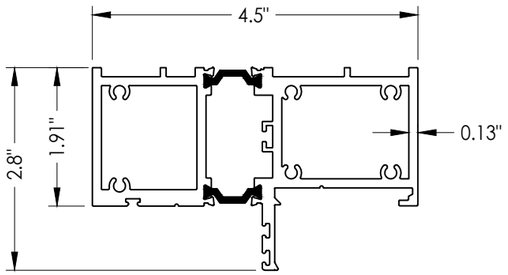

1 FRAME

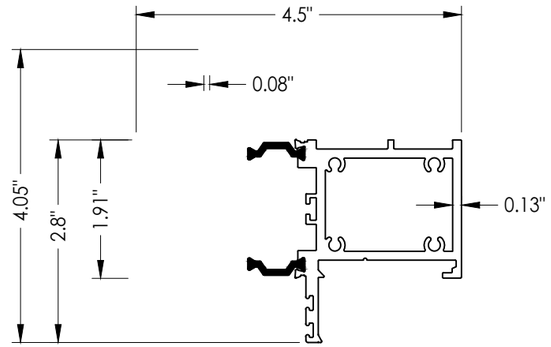

10 FRAME (FIN)

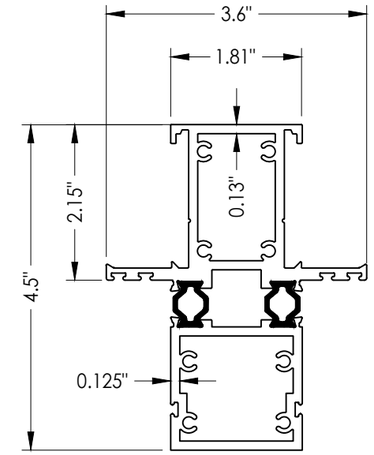

15 FRAME TEE BAR

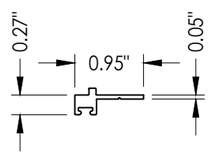

14 FIXED ADAPTOR

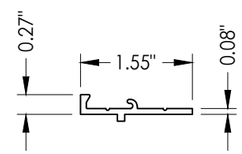

9 GLASS STOP ADAPTOR

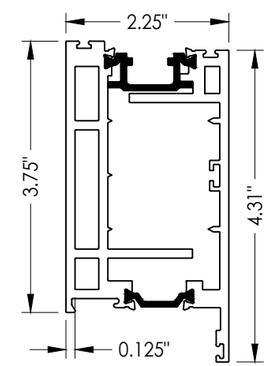

6 SASH

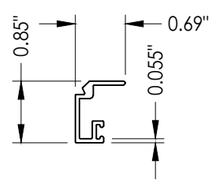

13 1.5" GLASS STOP

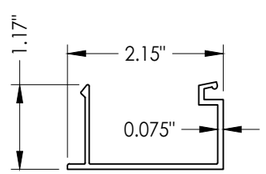

2 FRAME SNAP-IN

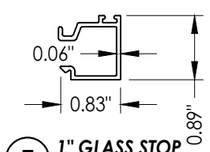

7 1" GLASS STOP

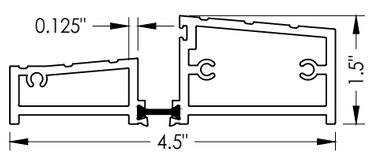

3 OUTSWING SILL

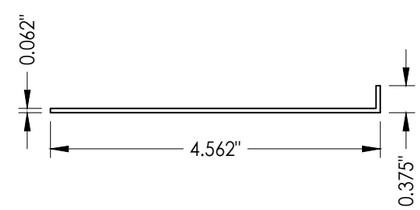

4 SILL PAN

Documents Prepared By:
Lyndon F. Schmidt
P.E. No. 43409

RW BUILDING CONSULTANTS, INC.
P.O. Box 230, Valrico, FL 33595
Phone No.: 813.659.9197
FBPE Registry No. 9813

PRODUCT:
FLEETWOOD WINDOWS AND DOORS

PART OR ASSEMBLY:
COMPONENTS

REVISIONS

NO.	DATE		BY
4	7/02/26	UPDATE TO 9TH ED. (2026) FBC	LFS
3	7/11/23	UPDATE TO 8TH ED. (2023) FBC	LFS
2	8/11/20	UPDATE TO 7th ED. (2020) FBC	DAC
1	08/07/17	UPDATE TO 6TH ED. (2017) FBC	LFS

DATE: 7/29/15
SCALE: N.T.S.
DWG. BY: JK
CHK. BY: LFS
DRAWING NO.: FL-17954.7
SHEET 11 OF 12

© 2015 R.W. BUILDING CONSULTANTS INC.

Z:\2023 FBC Drawings\Fleetwood Windows & Doors\FL-17954 R8 Side Hinged Door\FL-17954.1.3.4.6.7.dwg

BILL OF MATERIALS

ITEM #	DESCRIPTION	MATERIAL - MANUFACTURER
A	1X BUCK SG >= 0.55	WOOD
B	2X BUCK SG >= 0.55	WOOD
C	1/4" MAX. SHIM SPACE	-
D	1/4" X 2-3/4" DeWALT OR ITW PFH CONCRETE SCREW	STEEL
E	MASONRY - 3,000 PSI MIN. CONCRETE CONFORMING TO ACI 301 OR HOLLOW BLOCK CONFORMING TO ASTM C90	CONCRETE
F	#10 x 1-3/4" PPH WOOD SCREW (1-1/2" MIN. EMBEDMENT)	STEEL
G	#10 x 2" PPH WOOD SCREW (1-1/2" MIN. EMBEDMENT)	STEEL
H	3/16" X 1-3/4" ITW PFH CONCRETE SCREW	STEEL
J	1/4" X 3-1/4" ITW PFH CONCRETE SCREW	STEEL
K	#10 FH SELF-DRILLING SMS	STEEL
X	STEEL STUD Min. Thk .033" (ASTM A653 GRADE 33 Fy=33 Ksi Min, Fu=45 Ksi Min)	STEEL
1	FRAME	6063-T6 ALUM
2	FRAME SNAP-IN	6063-T6 ALUM
3	OUTSWING SILL	6063-T6 ALUM
4	SILL PAN	6063-T6 ALUM
6	SASH	6063-T6 ALUM
7	1" GLASS STOP	6063-T6 ALUM
8	ATLANTIC SEAL CLIP	6063-T6 ALUM
9	GLASS STOP ADAPTOR	6063-T6 ALUM
10	FRAME (FIN)	6063-T6 ALUM
13	1.5" GLASS STOP	6063-T6 ALUM
14	FIXED ADAPTOR	6063-T6 ALUM
15	FRAME TEE BAR	6063-T6 ALUM
20	BULB VINYL - MINI (EPDM 70 Durometer)	TREMCO, # TX20801E
21	BULB VINYL - LARGE (EPDM 70 Durometer)	TREMCO, # TX19638E
22	FOAM SEAL	EMESBURY, # 32390
23	Q-LON FOAM SEAL	SCHLEGEL CORP., # Q225T190
24	Q-LON FOAM SEAL	SCHLEGEL CORP., # Q375T190
25	Q-LON FOAM SEAL	SCHLEGEL CORP., # QEZ 376
31	BUTT HINGE	SAVIO
32	BACK UP KIT	SAVIO
33	HINGE BOLT, 8M X 48MM (FOR PANEL)	SAVIO
36	BACK UP PLATE FOR CORNER BLOCK	-
37	MACHINE SCREW NO 10-32, FHP 1.125"	STAINLESS STEEL
38	MACHINE SCREW NO 10-32, FHP .75"	STAINLESS STEEL
39	HEX HEAD CAP SCREW .375-16, 2.250"	STAINLESS STEEL
40	.375-16 SS. HEX NUT	STAINLESS STEEL
41	.375 SPLIT LOCK WASHER	STAINLESS STEEL
46	#10 X 1/2" PFH SMS	STAINLESS STEEL
47	#10 X 2" PFH SMS	STAINLESS STEEL
48	#8 x 1" PFH SMS	STAINLESS STEEL
49	#10 X 2-1/2" PFH SMS	STAINLESS STEEL
50	4" LONG SETTING BLOCK	-
51	REINFORCEMENT (1" X 1")	6061-T6 ALUM
52	ANCHOR BLOCK	6063-T6 ALUM
55	FIXED SILL BLOCK	6063-T6 ALUM
56	LATCH AND DEADBOLT STRIKE PLATE	STAINLESS STEEL
57	STRIKE PLATE	STAINLESS STEEL
60	TDL BAR	6063-T6 ALUM

CONCRETE ANCHOR NOTES:

1. Concrete anchor locations at the corners may be adjusted to maintain the min. edge distance to mortar joints.
2. Concrete anchor locations noted as "MAX. ON CENTER" must be adjusted to maintain the min. edge distance to mortar joints, additional concrete anchors may be required to ensure the "MAX. ON CENTER" dimension are not exceeded.
3. Concrete anchor table:

ANCHOR TYPE	ANCHOR SIZE	MIN. EMBEDMENT	MIN. CLEARANCE TO MASONRY EDGE	MIN. CLEARANCE TO ADJACENT ANCHOR
ITW TAPCON®	1/4"	1-1/4"	2"	4"
DeWALT ULTRACON+®	1/4"	1-1/4"	1"	4"
ITW TAPCON®	3/16"	1-1/4"	3"	1-1/2"

WOOD SCREW INSTALLATION NOTES:

1. *Maintain a minimum 5/8" edge distance, 1" end distance, & 1" o.c. spacing of wood screws to prevent the splitting of wood.*

Documents Prepared By:
Lyndon F. Schmidt
P.E. No. 43409
RW BUILDING CONSULTANTS, INC.
P.O. Box 230, Valrico, FL 33595
Phone No.: 813.659.9197
FBPE Registry No. 9813

PRODUCT: FLEETWOOD WINDOWS AND DOORS

PART OR ASSEMBLY: BILL OF MATERIALS

REVISIONS

NO.	DATE	BY
4	7/02/26	UPDATE TO 9TH ED. (2026) FBC	LFS
3	7/11/23	UPDATE TO 8TH ED. (2023) FBC	LFS
2	8/11/20	UPDATE TO 7th ED. (2020) FBC	DAC
1	08/07/17	UPDATE TO 6TH ED. (2017) FBC	LFS

DATE: 7/29/15
SCALE: N.T.S.
DWG. BY: JK
CHK. BY: LFS
DRAWING NO.: FL-17954.7
SHEET 12 OF 12

© 2015 R.W. Building Consultants Inc.

Z:\2023 FBC Drawings\Fleetwood Windows & Doors\FL-17954 R8 Side Hinged Door\FL-17954.1.3.4.6.7.dwg